Atti
Innovational Bathrooms

Product Data Sheet

Furniture

Adare 600mm 2 Drawer Wall Hung Vanity Unit

Product Information

Colour Options	Natural Oak
Basin Material	Ceramic basin 1 TH
Doors	2 soft close drawers
Certification	CE approved
Handle Options	Choice of handles options available

Natural Oak

Product Dimensions

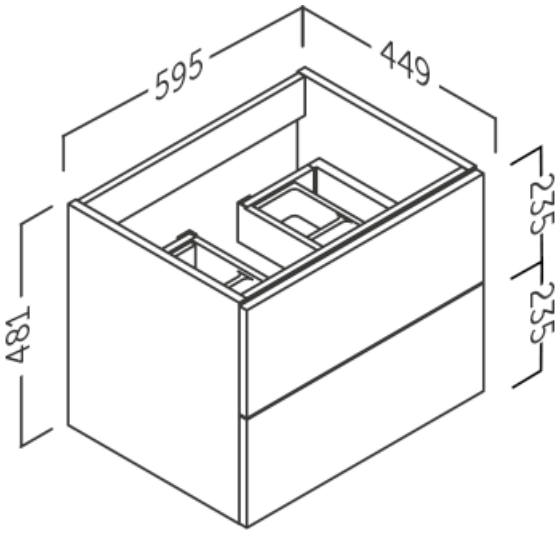

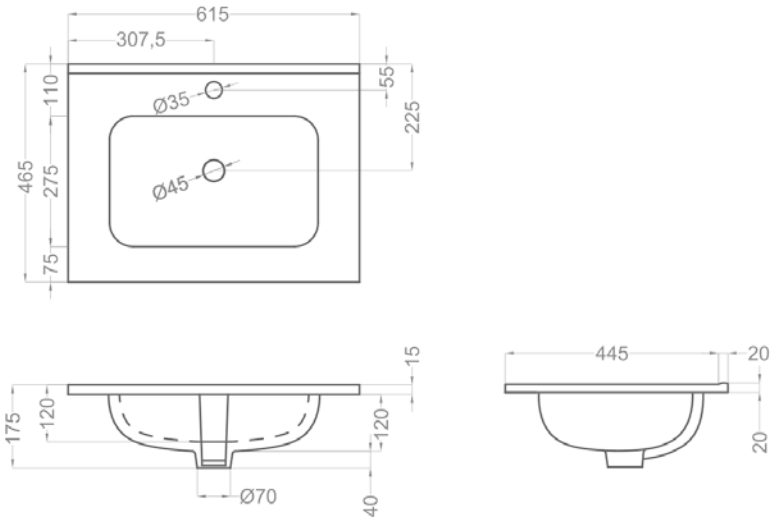

The information contained on this page was correct at date of issue. Fitting dimensions are provided as a guide only. Some variation may occur due to manufacturing tolerances. We pursue a policy of continuing improvement in design and performance of our products and so reserve the right to change specifications without prior notice.

All sizes are listed as accurate as possible however they can vary slightly. Please allow a variant of approx 10-20mm on certain products.