Techincal Data

Bathing

L Shape Shower Bath

- Can be drilled for tap holes.
- Left & right hand versions available.
- Includes panels & shower screen.
- Suitable for standard plug and chain / click clack or pop waste and bath overflow filler.
- CE Approved.

Right Hand

Left Hand

Product Dimensions

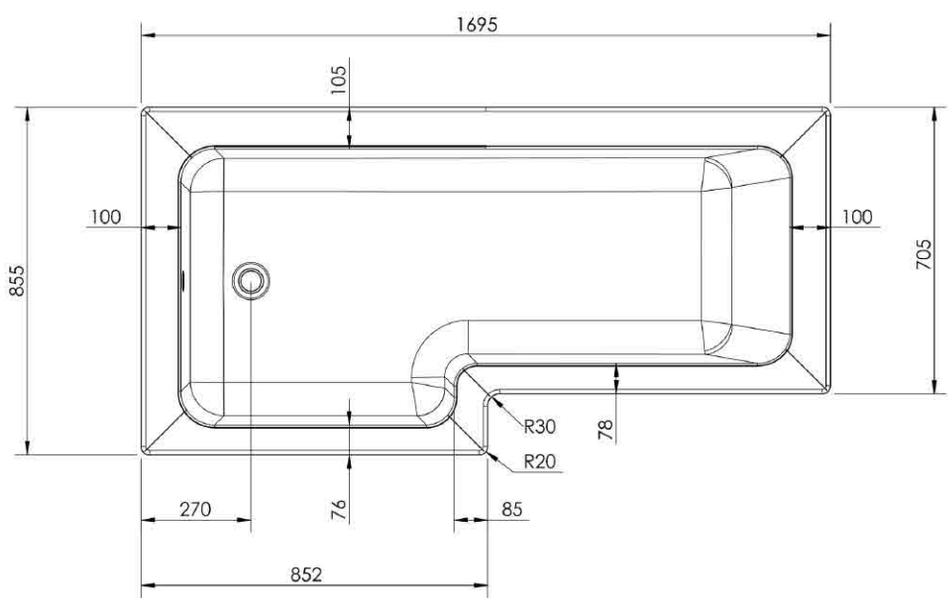

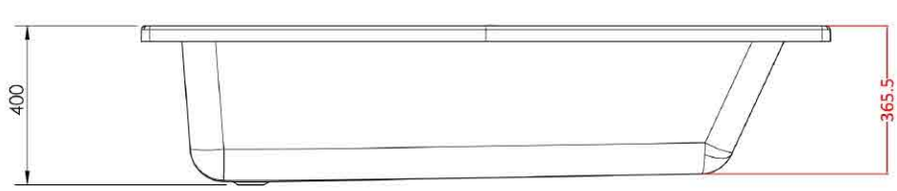

The information contained on this page was correct at date of issue. Fitting dimensions are provided as a guide only. Some variation may occur due to manufacturing tolerances.
We pursue a policy of continuing improvement in design and performance of our products and so reserve the right to change specifications without prior notice.
All sizes are listed as accurate as possible however they can vary slightly. Please allow a variant of approx 10-20mm on certain products.